THIS COPY IS PROVIDED ON A RESTRICTED BASIS AND IS NOT TO BE USED IN ANY WAY DETRIMENTAL TO THE INTERESTS OF PANDUIT CORP.

| PANDUIT PART NUMBER | STUD SIZE | DIMENSIONS in. | | | | |
|---|---|---|---|---|---|---|
| | | A ±.03 | W ±.01 | C ±.02 | M ±.03 | H ±.01 |
| PV14-6FFB-3K | #6 | .80 (20.32) | .28 (7.11) | .19 (4.83) | .64 (16.26) | .15 (3.81) |
| PV14-8FFB-3K | #8 | .86 (21.84) | .31 (7.87) | .23 (5.84) | .68 (17.27) | .17 (4.32) |
| PV14-10FFB-3K | #10 | .86 (21.84) | .35 (8.89) | .23 (5.84) | .68 (17.27) | .20 (5.08) |

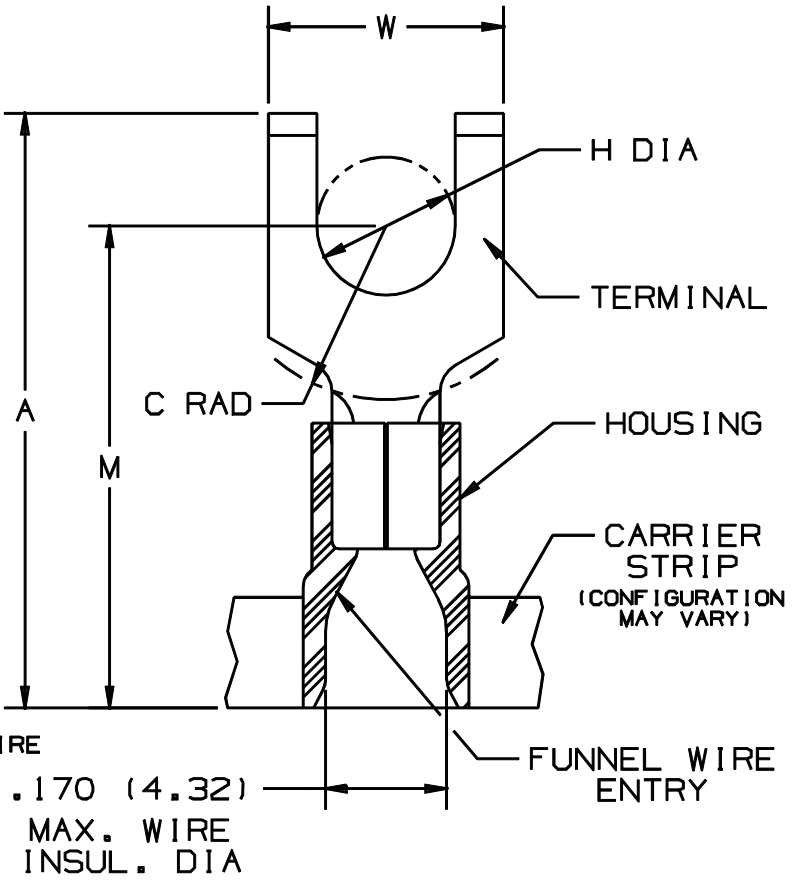


NOTES :

1. UL LISTED AND CSA CERTIFIED FOR :
   A. 600 V MAX. VOLTAGE RATING
   B. 221°F (105°C) MAX. TEMP. RATING
   C. #16-14 AWG (1.5-2.5 $mm^2$) SOLID OR STRANDED, COPPER WIRE
2. PACKAGE QTY. : 3K = 3000 PCS.
   CONTINUOUS MOLDED CARRIER STRIP
3. MATERIAL :
   A. STAMPING - .03" THK COPPER, TIN PLATED
   B. HOUSING - BLUE VINYL
4. DIMENSIONS IN BRACKETS ARE IN MILLIMETERS
5. INSTALLATION TOOLS :
   A. PRESSES - CP-851, CP-860, CP-861
   B. APPLICATOR - CA-800
   C. DIE INSERTS - CD-800-2

LISTED 587H E52164

CERTIFIED LR31212

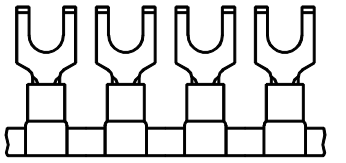

A41077_04

| REV | DATE | BY | CHK | DESCRIPTION | ECN | PM | CUST |
|---|---|---|---|---|---|---|---|
| 04 | 12/00 | ED | | FILESPEC WAS: N41077AA_PCD_03 | 03774 | | |
| 03 | 11/95 | ED | | REVISIONS TO NOTES AND TABLE | | | |

PANDUIT CORP. TINLEY PARK, ILLINOIS

TERMO 2PC CONTINUOUSLY MOLDED VINYL INSULATED, #16-14 BARREL, FLANGED FORKS

| DRAWN BY | CHK'D | SCALE | DRAWING NO |
|---|---|---|---|
| FES | FS | NONE | A41077 |