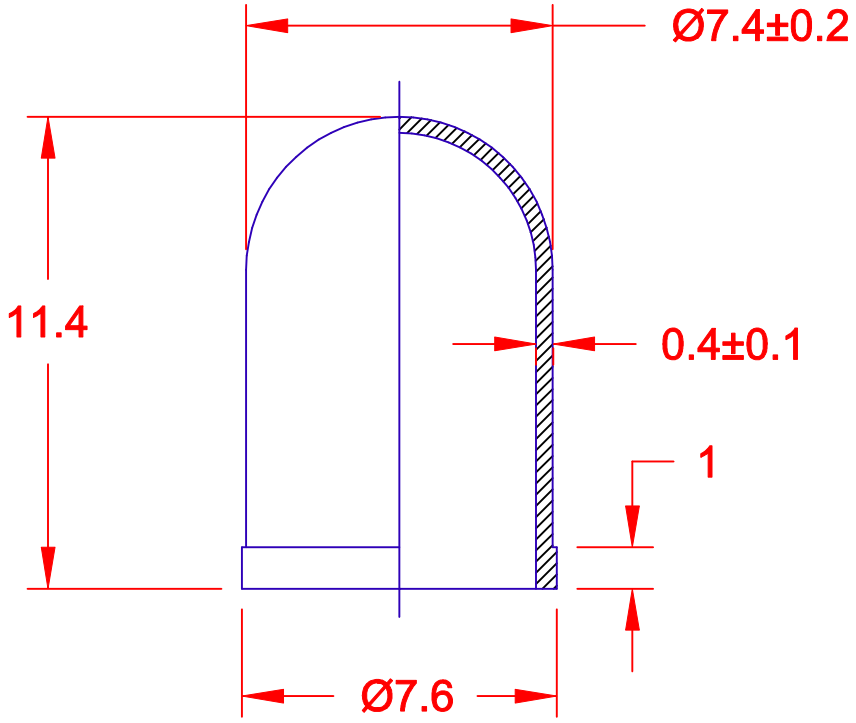

JKL PART NUMBER	COLOR
39-09-1*	RED
39-09-2*	ORANGE
39-09-3*	YELLOW
39-09-4*	GREEN
39-09-5*	BLUE
39-09-6*	BLUE-WHITE
39-09-7*	WHITE

*TO BE DETERMINED

REV. NO.	DESCRIPTION/ECO NUMBER	APPV'D DATE
	RELEASED	1/16/01

METRIC
THIRD ANGLE PROJECTION

DIMENSIONS ARE IN MILLIMETERS
TOLERANCE UNLESS OTHERWISE SPECIFIED
1 PL +/- 0.3
2 PL +/- 0.30
ANGLE +/-

JKL COMPONENTS CORPORATION

TITLE: LAMP FILTER

DRAWN BY	APPV'D BY	DATE	SIZE	FSCM NO.	DRAWING NO.
L. WENGSTROM	ED	1/16/01	A	55335	FILTER 39-09

- CAD DRAWING -
MANUAL REVISIONS NOT PERMITTED

SCALE	RELEASED DATE	REVISION DATE	REV. NO.	SHEET
NONE	1/16/01			1 OF 1